Cambridge Assessment International Education

Cambridge International AS & A Level

CANDIDATE NAME

CENTRE NUMBER

CANDIDATE NUMBER

0435157258

PHYSICS **9702/43**

Paper 4 A Level Structured Questions **May/June 2020**

2 hours

You must answer on the question paper.

No additional materials are needed.

INSTRUCTIONS

- Answer **all** questions.
- Use a black or dark blue pen. You may use an HB pencil for any diagrams or graphs.
- Write your name, centre number and candidate number in the boxes at the top of the page.
- Write your answer to each question in the space provided.
- Do **not** use an erasable pen or correction fluid.
- Do **not** write on any bar codes.
- You may use a calculator.
- You should show all your working and use appropriate units.

INFORMATION

- The total mark for this paper is 100.
- The number of marks for each question or part question is shown in brackets [ ].

This document has **28** pages. Blank pages are indicated.

© UCLES 2020

Data

speed of light in free space	$c = 3.00 \times 10^{8}\,\text{m s}^{-1}$
permeability of free space	$\mu_0 = 4\pi \times 10^{-7}\,\text{H m}^{-1}$
permittivity of free space	$\varepsilon_0 = 8.85 \times 10^{-12}\,\text{F m}^{-1}$
	$(\frac{1}{4\pi\varepsilon_0} = 8.99 \times 10^{9}\,\text{m F}^{-1})$
elementary charge	$e = 1.60 \times 10^{-19}\,\text{C}$
the Planck constant	$h = 6.63 \times 10^{-34}\,\text{J s}$
unified atomic mass unit	$1\,\text{u} = 1.66 \times 10^{-27}\,\text{kg}$
rest mass of electron	$m_e = 9.11 \times 10^{-31}\,\text{kg}$
rest mass of proton	$m_p = 1.67 \times 10^{-27}\,\text{kg}$
molar gas constant	$R = 8.31\,\text{J K}^{-1}\,\text{mol}^{-1}$
the Avogadro constant	$N_A = 6.02 \times 10^{23}\,\text{mol}^{-1}$
the Boltzmann constant	$k = 1.38 \times 10^{-23}\,\text{J K}^{-1}$
gravitational constant	$G = 6.67 \times 10^{-11}\,\text{N m}^2\,\text{kg}^{-2}$
acceleration of free fall	$g = 9.81\,\text{m s}^{-2}$

© UCLES 2020

Formulae

uniformly accelerated motion	$s = ut + \frac{1}{2}at^2$ $v^2 = u^2 + 2as$
work done on/by a gas	$W = p\Delta V$
gravitational potential	$\phi = -\frac{Gm}{r}$
hydrostatic pressure	$p = \rho gh$
pressure of an ideal gas	$p = \frac{1}{3}\frac{Nm}{V}\langle c^2 \rangle$
simple harmonic motion	$a = -\omega^2 x$
velocity of particle in s.h.m.	$v = v_0 \cos \omega t$ $v = \pm \omega\sqrt{(x_0^2 - x^2)}$
Doppler effect	$f_o = \frac{f_s v}{v \pm v_s}$
electric potential	$V = \frac{Q}{4\pi\varepsilon_0 r}$
capacitors in series	$1/C = 1/C_1 + 1/C_2 + \ldots$
capacitors in parallel	$C = C_1 + C_2 + \ldots$
energy of charged capacitor	$W = \frac{1}{2}QV$
electric current	$I = Anvq$
resistors in series	$R = R_1 + R_2 + \ldots$
resistors in parallel	$1/R = 1/R_1 + 1/R_2 + \ldots$
Hall voltage	$V_H = \frac{BI}{ntq}$
alternating current/voltage	$x = x_0 \sin \omega t$
radioactive decay	$x = x_0 \exp(-\lambda t)$
decay constant	$\lambda = \frac{0.693}{t_{\frac{1}{2}}}$

© UCLES 2020

[Turn over

Answer **all** the questions in the spaces provided.

1 **(a)** State what is meant by a *gravitational force*.

.....

..... [1]

(b) A binary star system consists of two stars S_1 and S_2, each in a circular orbit.

The orbit of each star in the system has a period of rotation T.

Observations of the binary star from Earth are represented in Fig. 1.1.

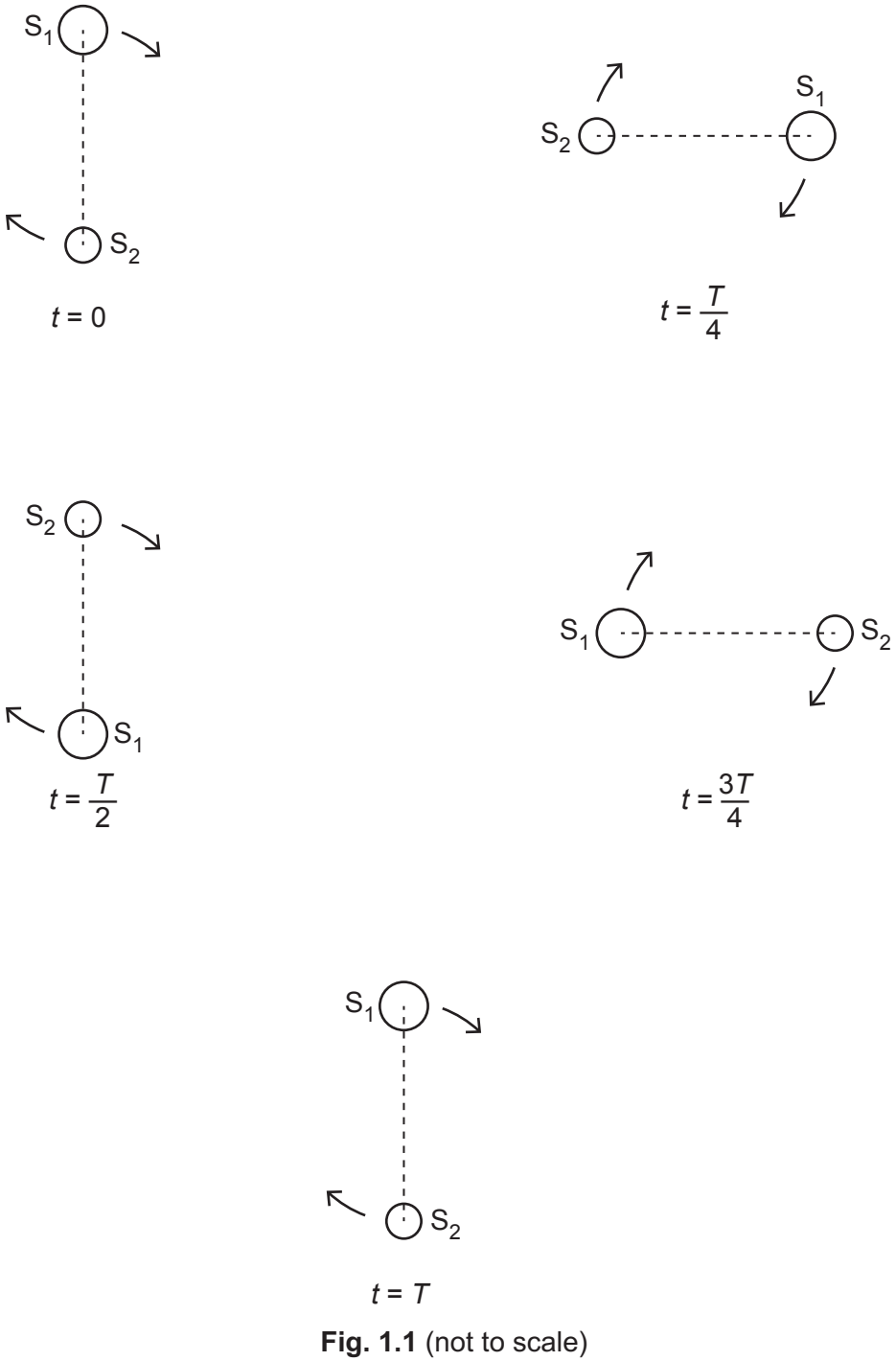

Fig. 1.1 (not to scale)

Observed from Earth, the angular separation of the centres of S_1 and S_2 is 1.2×10^{-5} rad. The distance of the binary star system from Earth is 1.5×10^{17} m.

Show that the separation d of the centres of S_1 and S_2 is 1.8×10^{12} m.

[1]

(c) The stars S_1 and S_2 rotate with the same angular velocity ω about a point P, as illustrated in Fig. 1.2.

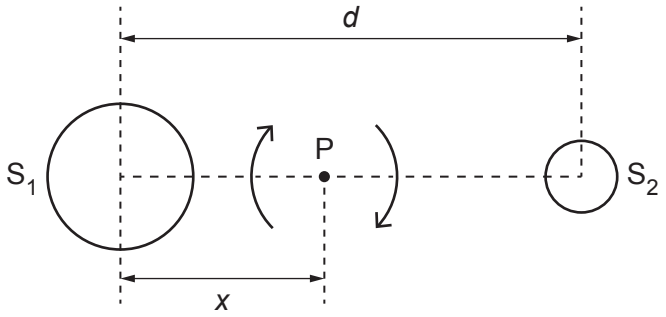

Fig. 1.2 (not to scale)

Point P is at a distance x from the centre of star S_1.
The period of rotation of the stars is 44.2 years.

(i) Calculate the angular velocity ω.

ω = ... rad s^{-1} [2]

(ii) By considering the forces acting on the two stars, show that the ratio of the masses of the stars is given by

$$\frac{\text{mass of } S_1}{\text{mass of } S_2} = \frac{d - x}{x}.$$

[2]

(iii) The mass M_1 of star S_1 is given by the expression

$$GM_1 = d^2(d - x)\omega^2$$

where G is the gravitational constant.

The ratio in **(ii)** is found to be 1.5.

Use data from **(b)** and your answer in **(c)(i)** to determine the mass M_1.

M_1 = ... kg [3]

[Total: 9]

© UCLES 2020

2 **(a)** State what is meant by the *internal energy* of a system.

.....

.....

.....

..... [2]

(b) By reference to intermolecular forces, explain why the change in internal energy of an ideal gas is equal to the change in total kinetic energy of its molecules.

.....

.....

..... [2]

(c) State and explain the change, if any, in the internal energy of a solid metal ball as it falls under gravity in a vacuum.

.....

.....

.....

..... [3]

[Total: 7]

3 The piston in the cylinder of a car engine moves in the cylinder with simple harmonic motion. The piston moves between a position of maximum height in the cylinder to a position of minimum height, as illustrated in Fig. 3.1.

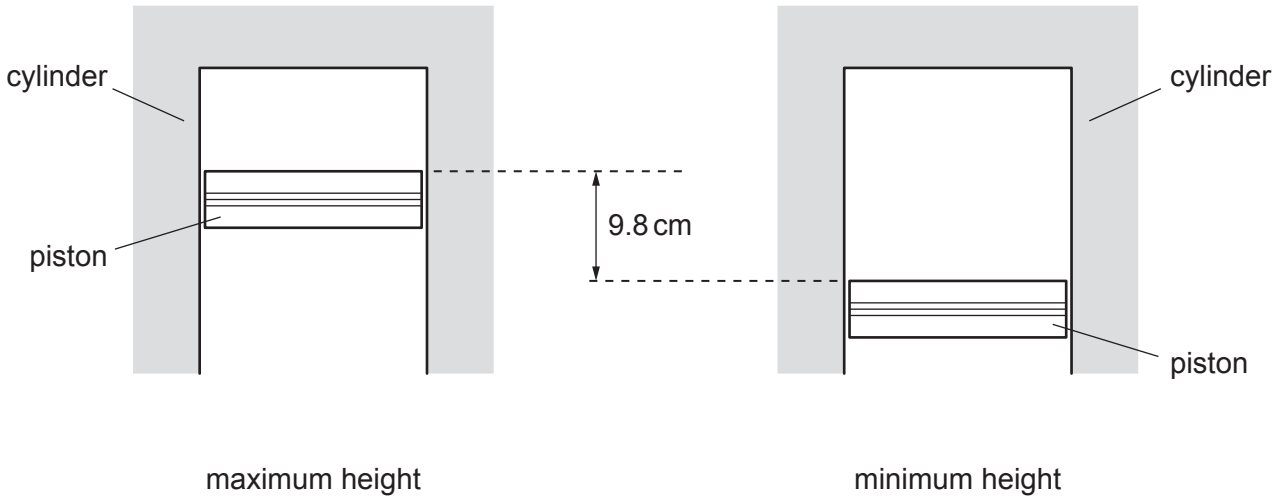

Fig. 3.1

The distance moved by the piston between the positions shown in Fig. 3.1 is 9.8 cm.

The mass of the piston is 640 g.

At one particular speed of the engine, the piston completes 2700 oscillations in 1.0 minute.

(a) For the oscillations of the piston in the cylinder, determine:

(i) the amplitude

amplitude = ... cm [1]

(ii) the frequency

frequency = ... Hz [1]

(iii) the maximum speed

maximum speed = ... $m\,s^{-1}$ [2]

© UCLES 2020

(iv) the speed when the top of the piston is 2.3 cm below its maximum height.

speed = ... $m\,s^{-1}$ [2]

(b) The acceleration of the piston varies.

Determine the resultant force on the piston that gives rise to its maximum acceleration.

force = ... N [3]

[Total: 9]

4 (a) (i) By reference to an ultrasound wave, explain what is meant by *specific acoustic impedance*.

.....

.....

..... [2]

(ii) An ultrasound wave is incident normally on the boundary between two media. The media have specific acoustic impedances Z_1 and Z_2.

State how the ratio

$$\frac{\text{intensity of ultrasound reflected from boundary}}{\text{intensity of ultrasound incident on boundary}}$$

depends on the relative magnitudes of Z_1 and Z_2.

.....

.....

.....

..... [2]

(b) (i) State what is meant by the *attenuation* of an ultrasound wave.

.....

..... [1]

(ii) A parallel beam of ultrasound is passing through a medium.
The incident intensity I_0 is reduced to $0.35 I_0$ on passing through a thickness of 0.046 m of the medium.

Calculate the linear attenuation coefficient μ of the ultrasound beam in the medium.

μ = ... m^{-1} [2]

[Total: 7]

© UCLES 2020

5 **(a)** State **one** similarity and **one** difference between the fields of force produced by an isolated point charge and by an isolated point mass.

similarity: .....

.....

difference: .....

.....

[2]

(b) An isolated solid metal sphere A of radius R has charge $+Q$, as illustrated in Fig. 5.1.

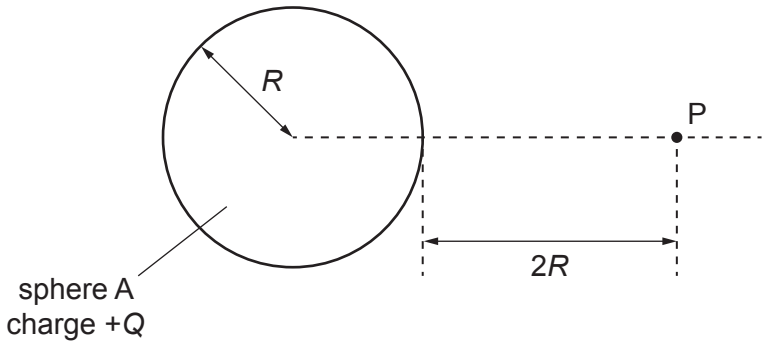

Fig. 5.1

A point P is distance $2R$ from the surface of the sphere.

Determine an expression that includes the terms R and Q for the electric field strength E at point P.

E = ... [2]

(c) A second identical solid metal sphere B is now placed near sphere A. The centres of the spheres are separated by a distance 6*R*, as shown in Fig. 5.2.



Fig. 5.2

Point P lies midway between spheres A and B.

Sphere B has charge –*Q*.

Explain why:

(i) the magnitude of the electric field strength at P is given by the sum of the magnitudes of the field strengths due to each sphere

.....

..... [1]

(ii) the electric field strength at point P due to the charged metal spheres is not, in practice, equal to 2*E*, where *E* is the electric field strength determined in **(b)**.

.....

.....

..... [2]

[Total: 7]

© UCLES 2020

6 **(a)** The transmission of signals using optic fibres has, to a great extent, replaced the use of coaxial cables.

Advantages of optic fibres include greater bandwidth and very little crosslinking.

(i) Suggest an advantage of greater bandwidth.

.....

..... [1]

(ii) State what is meant by *crosslinking*.

.....

.....

..... [2]

(b) In telecommunications, a signal power of 1.0 mW is used as a reference power.
Signal powers relative to this reference power and expressed in dB are said to be measured in 'dBm'.

Show that a signal power of 13 dBm is equivalent to 20 mW.

[2]

(c) A signal of input power 20 mW is transmitted along an optic fibre for an uninterrupted distance of 45 km.

The optic fibre has an attenuation per unit length of 0.18 dB km^{-1}.

Calculate the output power *P* from the optic fibre.

P = ... mW [2]

[Total: 7]

7 The output of a microphone is processed using a non-inverting amplifier. The amplifier incorporates an operational amplifier (op-amp).

(a) State, by reference to the input and output signals, the function of a non-inverting amplifier.

.....

.....

..... [2]

(b) The circuit for the microphone and amplifier is shown in Fig. 7.1.

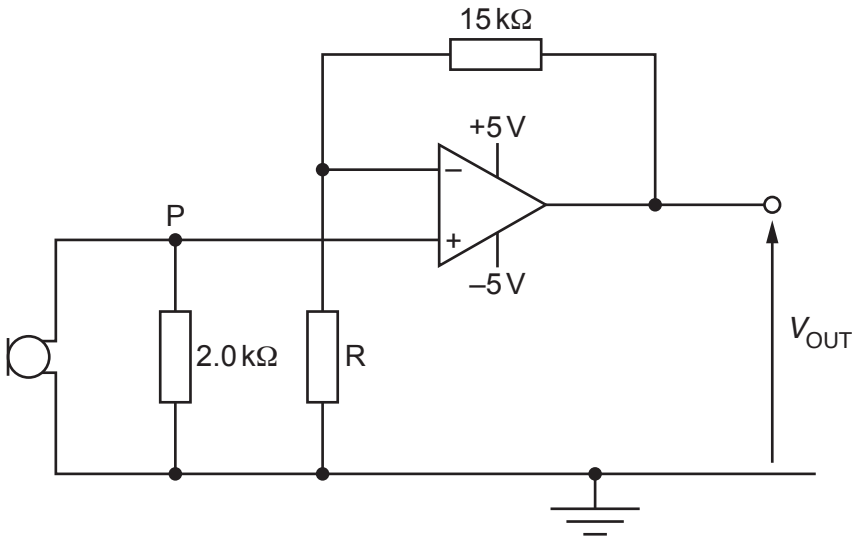

Fig. 7.1

The output potential difference V_{OUT} is 2.6 V when the potential at point P is 84 mV.

Determine:

(i) the gain of the amplifier circuit

gain = ... [1]

(ii) the resistance of resistor R.

resistance = ... Ω [2]

(c) For the circuit of Fig. 7.1:

(i) suggest a suitable device to connect to the output such that the shape of the waveform of the sound received by the microphone may be examined

..... [1]

(ii) state and explain the effect on the output potential difference V_{OUT} of increasing the resistance of resistor R.

.....

.....

..... [2]

[Total: 8]

© UCLES 2020

8 **(a)** Define the *tesla*.

.....

.....

.....

..... [3]

(b) A magnet produces a uniform magnetic field of flux density *B* in the space between its poles.

A rigid copper wire carrying a current is balanced on a pivot. Part PQLM of the wire is between the poles of the magnet, as illustrated in Fig. 8.1.

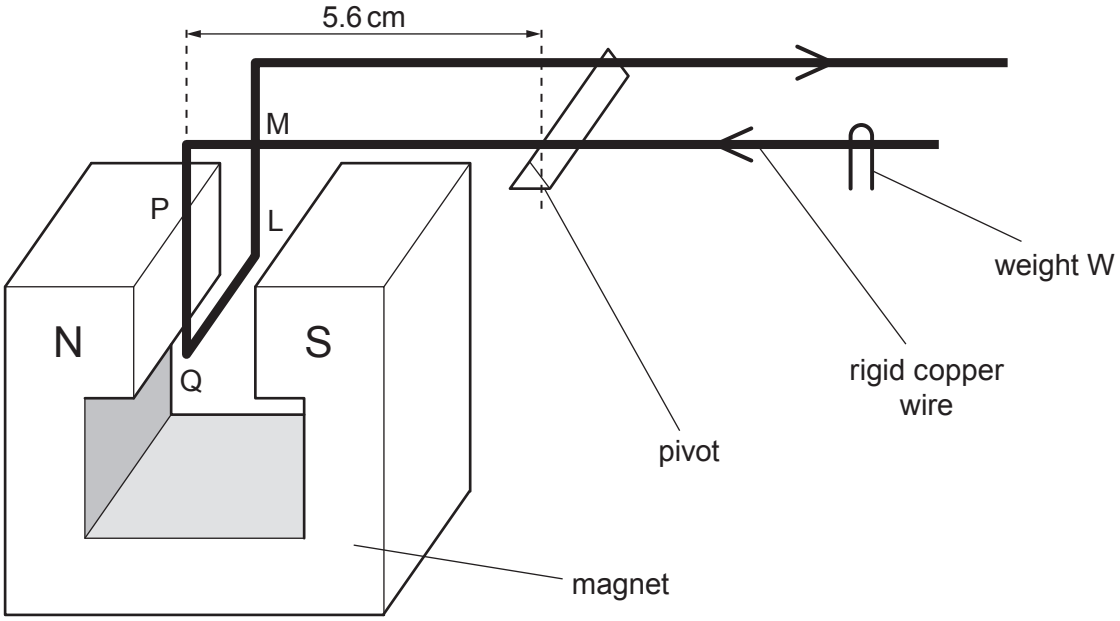

Fig. 8.1 (not to scale)

The wire is balanced horizontally by means of a small weight W.

The section of the wire between the poles of the magnet is shown in Fig. 8.2.

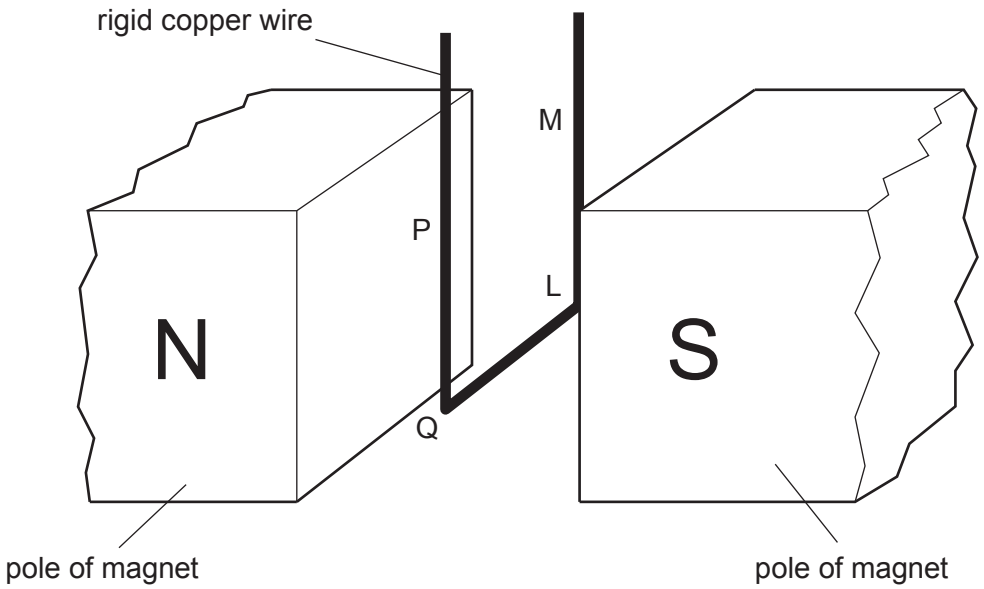

Fig. 8.2 (not to scale)

Explain why:

(i) section QL of the wire gives rise to a moment about the pivot

.....

.....

.....

..... [3]

(ii) sections PQ and LM of the wire do not affect the equilibrium of the wire.

.....

.....

.....

..... [2]

(c) Section QL of the wire has length 0.85 cm.

The perpendicular distance of QL from the pivot is 5.6 cm.

When the current in the wire is changed by 1.2 A, W is moved a distance of 2.6 cm along the wire in order to restore equilibrium. The mass of W is 1.3×10^{-4} kg.

(i) Show that the change in moment of W about the pivot is 3.3×10^{-5} N m.

[2]

(ii) Use the information in **(i)** to determine the magnetic flux density B between the poles of the magnet.

B = ... T [3]

[Total: 13]

BLANK PAGE

9 **(a)** A coil of wire is situated in a uniform magnetic field of flux density *B*.
The coil has diameter 3.6 cm and consists of 350 turns of wire, as illustrated in Fig. 9.1.

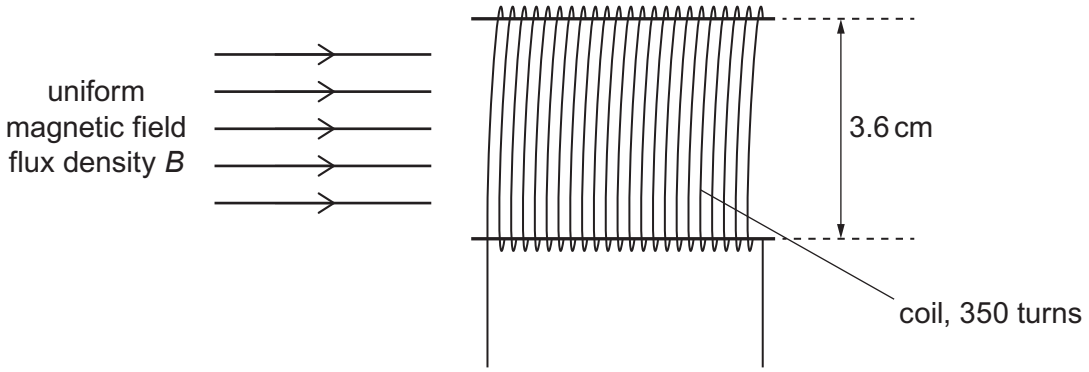

Fig. 9.1

The variation with time t of B is shown in Fig. 9.2.

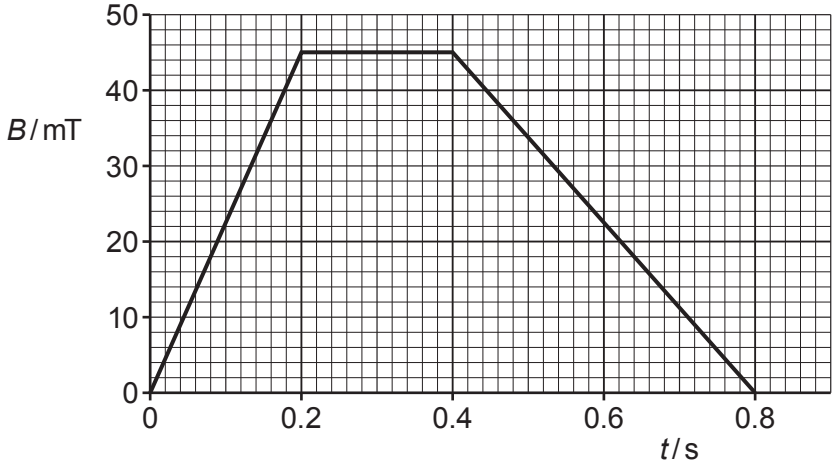

Fig. 9.2

(i) Show that, for the time $t = 0$ to time $t = 0.20\,s$, the electromotive force (e.m.f.) induced in the coil is 0.080 V.

[2]

(ii) On the axes of Fig. 9.3, show the variation with time t of the induced e.m.f. E for time $t = 0$ to time $t = 0.80\,s$.

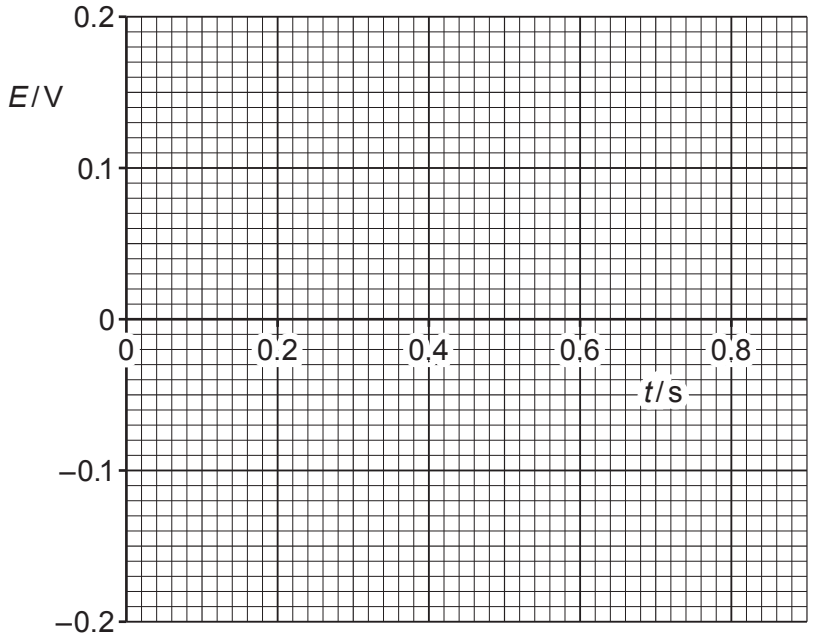

Fig. 9.3

[4]

(b) A bar magnet is held a small distance above the surface of an aluminium disc by means of a rod, as illustrated in Fig. 9.4.

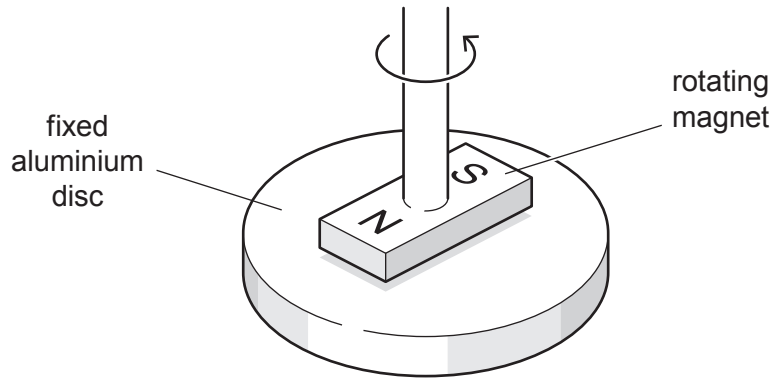

Fig. 9.4

The aluminium disc is supported horizontally and held stationary.

The magnet is rotated about a vertical axis at constant speed.

Use laws of electromagnetic induction to explain why there is a torque acting on the aluminium disc.

.....

.....

.....

.....

.....

..... [4]

[Total: 10]

© UCLES 2020

10 (a) White light passes through a cloud of cool low-pressure gas, as illustrated in Fig. 10.1.

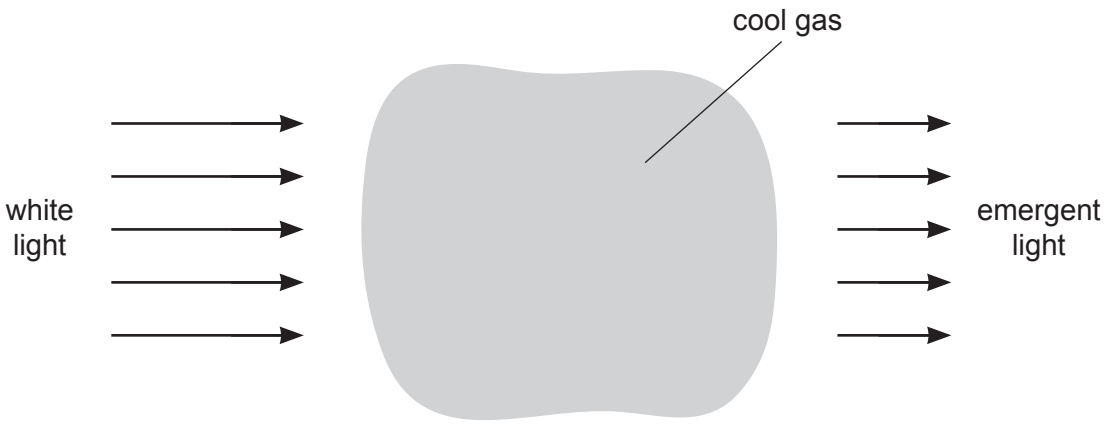

Fig. 10.1

For light that has passed through the gas, its continuous spectrum is seen to contain a number of darker lines.

Use the concept of discrete electron energy levels to explain the existence of these darker lines.

.....

.....

.....

.....

.....

..... [4]

(b) The uppermost electron energy bands in a solid are illustrated in Fig. 10.2.

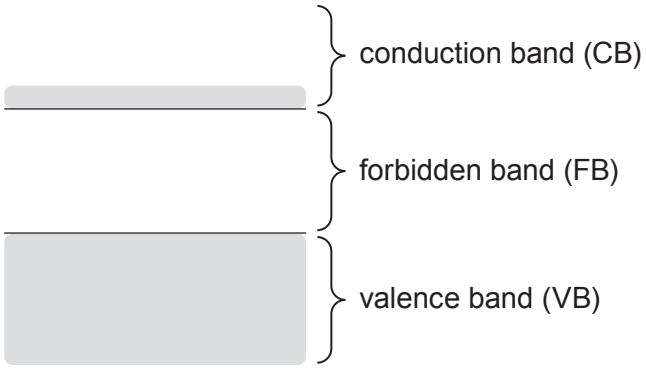

Fig. 10.2

Use band theory to explain the dependence on light intensity of the resistance of a light-dependent resistor (LDR).

.....

.....

.....

.....

.....

.....

..... [5]

[Total: 9]

© UCLES 2020

11 An electron, at rest, has mass m_e and charge $-q$.

A positron is a particle that, at rest, has mass m_e and charge $+q$.

A positron interacts with an electron. The electron and the positron may be considered to be at rest.
The outcome of this interaction is that the electron and the positron become two gamma-ray (γ-ray) photons, each having the same energy.

(a) Calculate, for one of the γ-ray photons:

(i) the photon energy, in J

energy = ... J [2]

(ii) its momentum.

momentum = ... N s [2]

(b) State and explain the direction, relative to each other, in which the γ-ray photons are emitted.

.....

.....

.....

..... [2]

[Total: 6]

12 **(a)** The decay of a sample of a radioactive isotope is said to be random and spontaneous.

Explain what is meant by the decay being:

(i) *random*

.....

..... [1]

(ii) *spontaneous*.

.....

..... [1]

(b) A radioactive isotope X has a half-life of 1.4 hours.

Initially, a pure sample of this isotope X has an activity of 3.6×10^5 Bq.

Determine the activity of the isotope X in the sample after a time of 2.0 hours.

activity = ... Bq [3]

© UCLES 2020

(c) The variation with time t of the actual activity A of the sample in **(b)** is shown in Fig. 12.1.

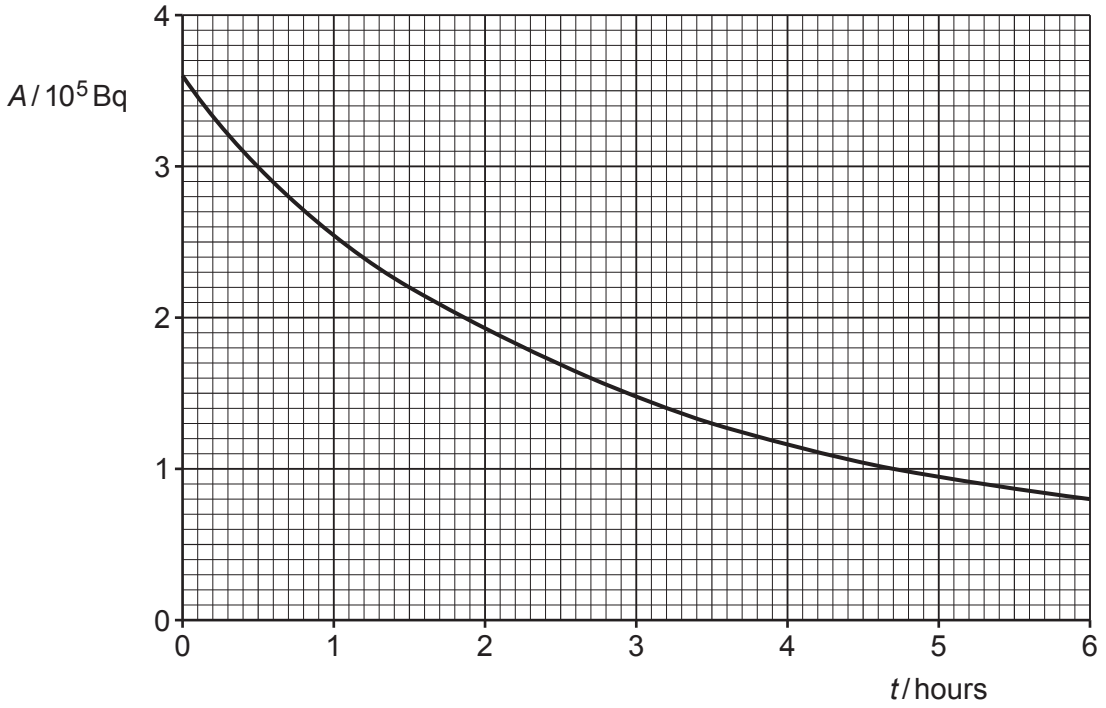

Fig. 12.1

(i) The initial activity of isotope X in the sample is 3.6×10^5 Bq.

Use information from **(b)** to sketch, on the axes of Fig. 12.1, the variation with time t of the activity of a pure sample of isotope X. [1]

(ii) Suggest an explanation for any difference between the actual activity of the sample shown in Fig. 12.1 and the curve you have drawn for the activity of isotope X.

.....

.....

..... [2]

[Total: 8]

© UCLES 2020

BLANK PAGE

Permission to reproduce items where third-party owned material protected by copyright is included has been sought and cleared where possible. Every reasonable effort has been made by the publisher (UCLES) to trace copyright holders, but if any items requiring clearance have unwittingly been included, the publisher will be pleased to make amends at the earliest possible opportunity.

To avoid the issue of disclosure of answer-related information to candidates, all copyright acknowledgements are reproduced online in the Cambridge Assessment International Education Copyright Acknowledgements Booklet. This is produced for each series of examinations and is freely available to download at www.cambridgeinternational.org after the live examination series.

Cambridge Assessment International Education is part of the Cambridge Assessment Group. Cambridge Assessment is the brand name of the University of Cambridge Local Examinations Syndicate (UCLES), which itself is a department of the University of Cambridge.

© UCLES 2020